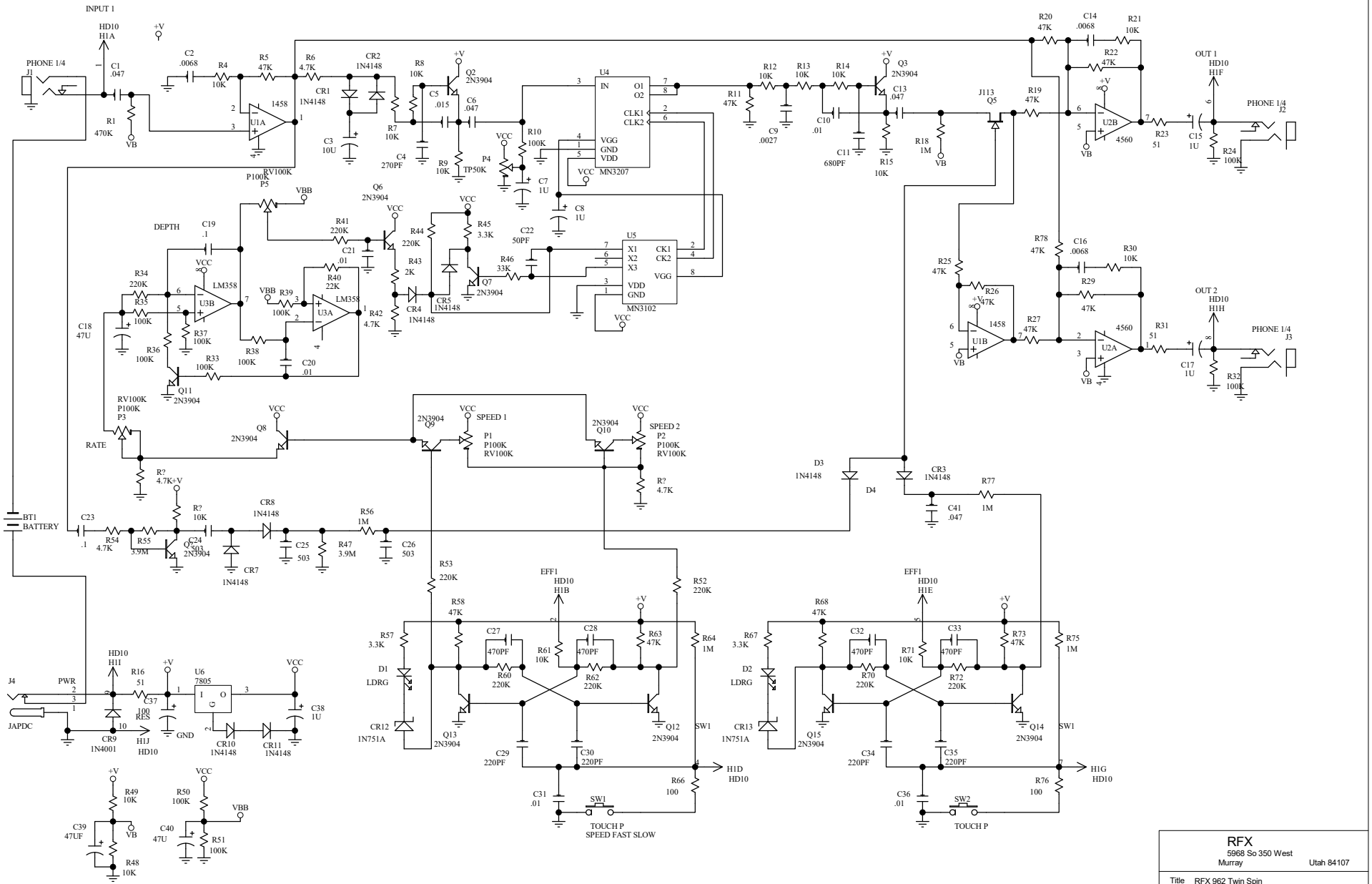

RFX
5968 So 350 West
Murray Utah 84107

Title RFX 962 Twin Spin		
Size: Ba	Document Number: rfx962.sch	Rev: A
Date: 9 Feb 1995	Sheet 1 of 1	